WINDOW FLASHING SYSTEM INSTALLATION INSTRUCTIONS

FOR

PUNCHED WINDOW OPENINGS WITH HUNG STEEL LINTELS IN BUILDING ENCLOSURE SYSTEMS WITH AIR AND VAPOR BARRIER SYSTEMS AND CAVITY INSULATION

Offered By:

EXO-TEC Manufacturing, Inc.
22 Washington Street
Stoughton, MA 02072
(781) 344-9794
Fax (781) 344-9823

http://www.exo-tec.biz

E-Mail: len@exo-tec.biz

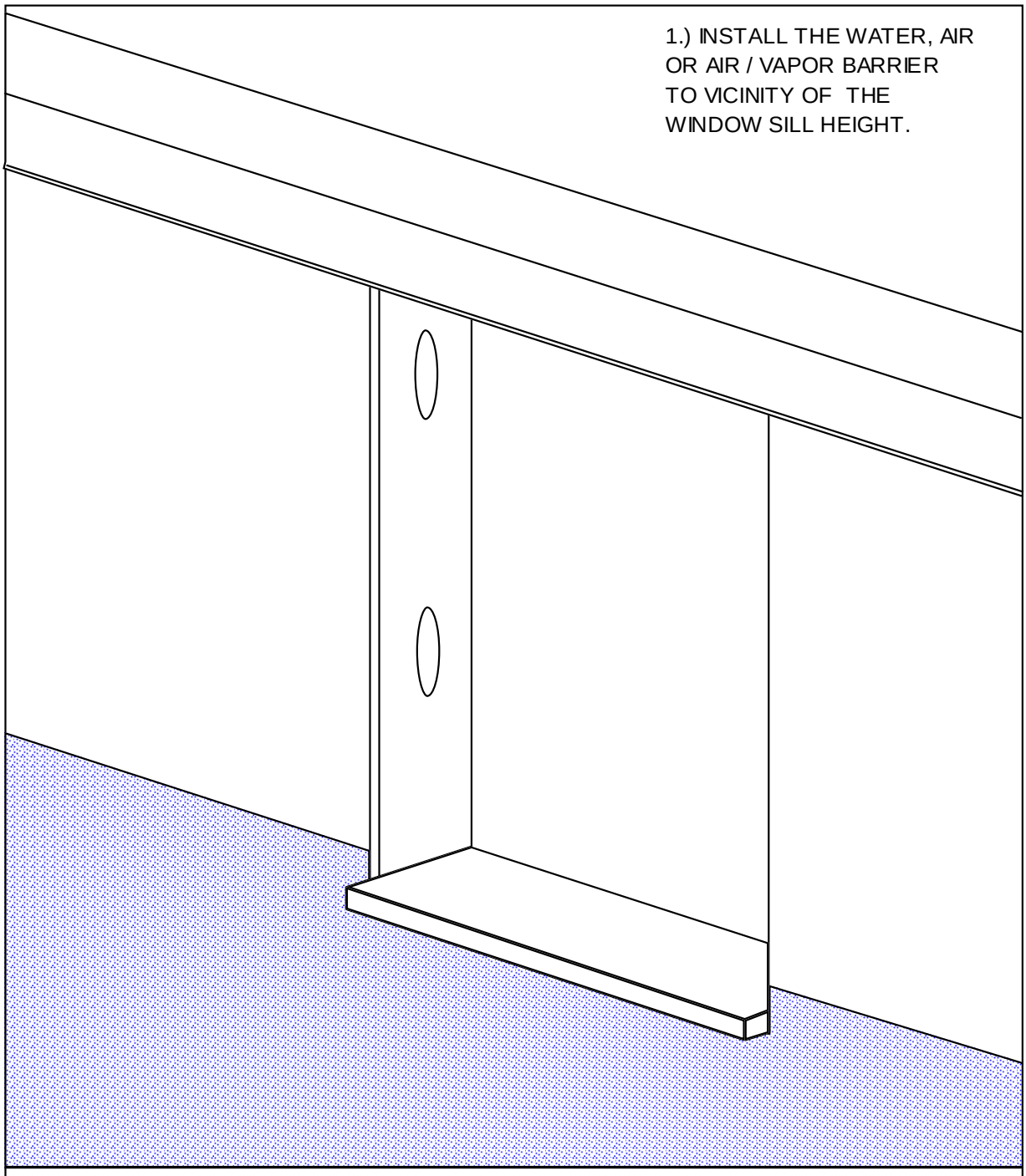

EXO-TEC MANUFACTURING, INC.
294 PLEASANT ST. SUITE 203A, STOUGHTON, MA 02072
(781) 344-9794 FAX (781) 344-9823
www.exo-tec.biz

WINDOW FLASHING SYSTEM INSTALLATION: STEP 1

2.) INSTALL HYLOAD WINDOW SILL CORNER CLOAKS SET IN A FULLBED OR A CONTINUOUS BEAD OF HYLOAD ADHESIVE.

HYLOAD WINDOW SILL CORNER CLOAK ISO

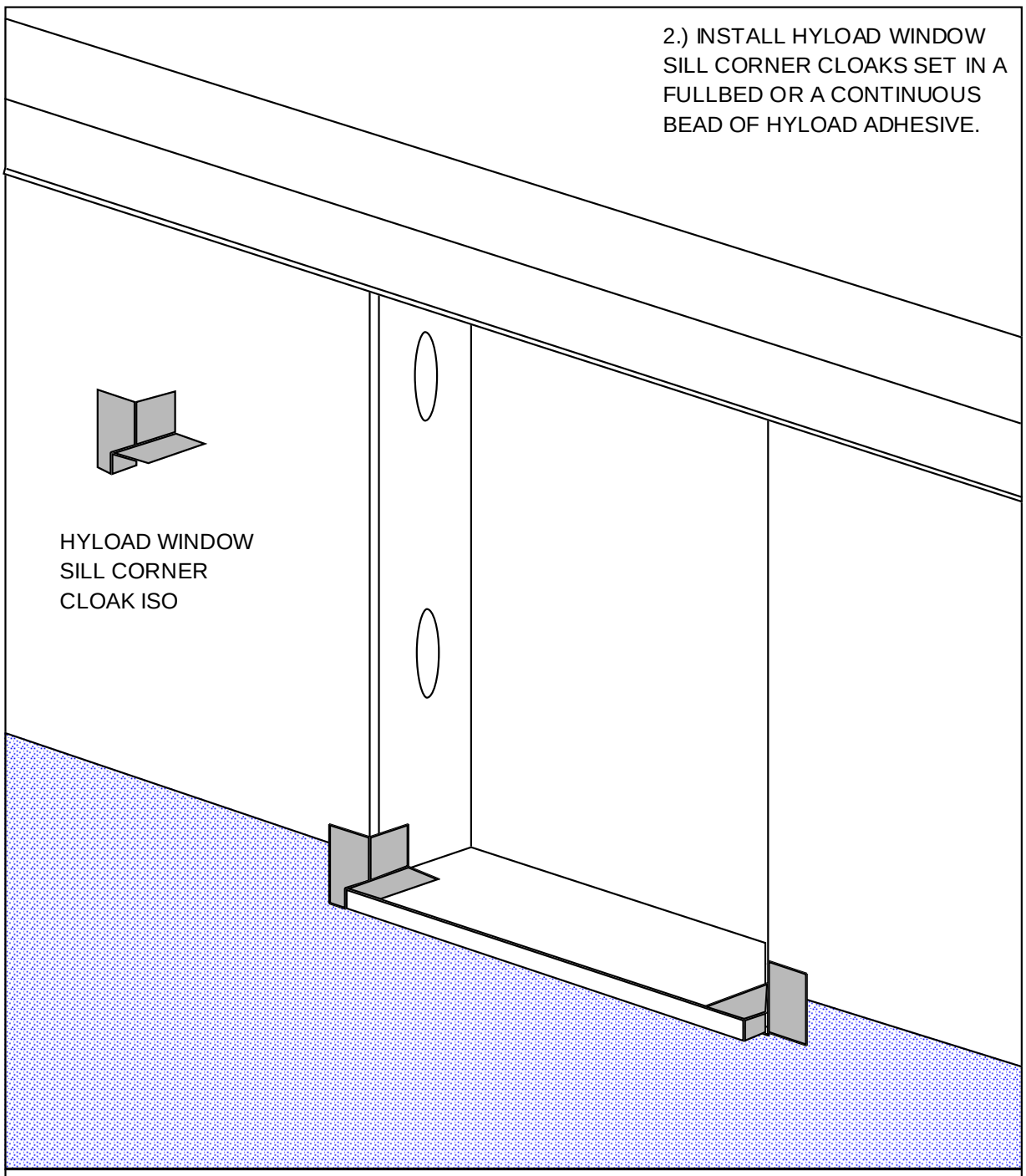

EXO-TEC MANUFACTURING, INC.
294 PLEASANT ST. SUITE 203A, STOUGHTON, MA 02072
(781) 344-9794 FAX (781) 344-9823
www.exo-tec.biz

WINDOW FLASHING SYSTEM INSTALLATION: STEP 2

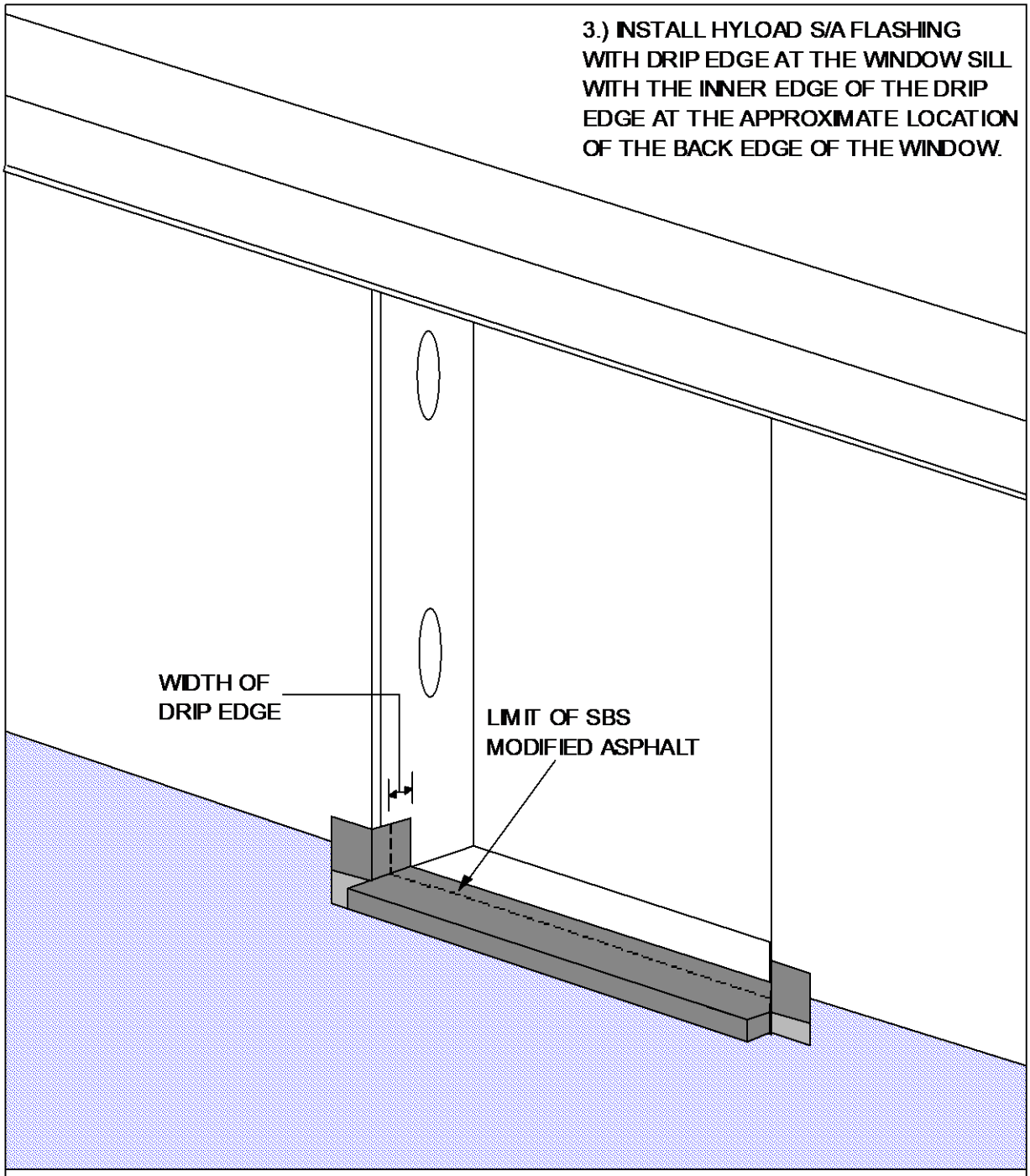

EXO-TEC MANUFACTURING, INC.
294 PLEASANT ST. SUITE 203A, STOUGHTON, MA 02072
(781) 344-9794 FAX (781) 344-9823
www.exo-tec.biz

WINDOW FLASHING SYSTEM INSTALLATION: STEP 3

4.) INSTALL JAMFLASH® BY SEATING IT TIGHTLY TO THE JAMB AND SHEATHING THEN FASTENING IT WITH CORROSION RESISTANT, PANCAKE HEAD,SELF-TAPPING SCREWS AT 12" O.C. ON BOTH FASTENING LEGS.

NOTE: SEE CROSS SECTION AT JAMB 1 SKETCH

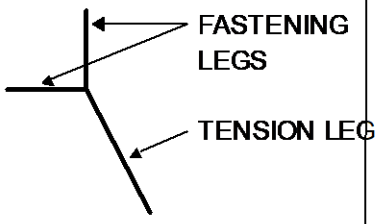

JAMFLASH TOP VIEW

INSTALL THE JAMFLASH® +/- 1/4" DOWN FROM THE TOP OF THE ROUGH OPENING

EXO-TEC MANUFACTURING, INC.
294 PLEASANT ST. SUITE 203A, STOUGHTON, MA 02072
(781) 344-9794 FAX (781) 344-9823
www.exo-tec.biz

WINDOW FLASHING SYSTEM INSTALLATION: STEP 4

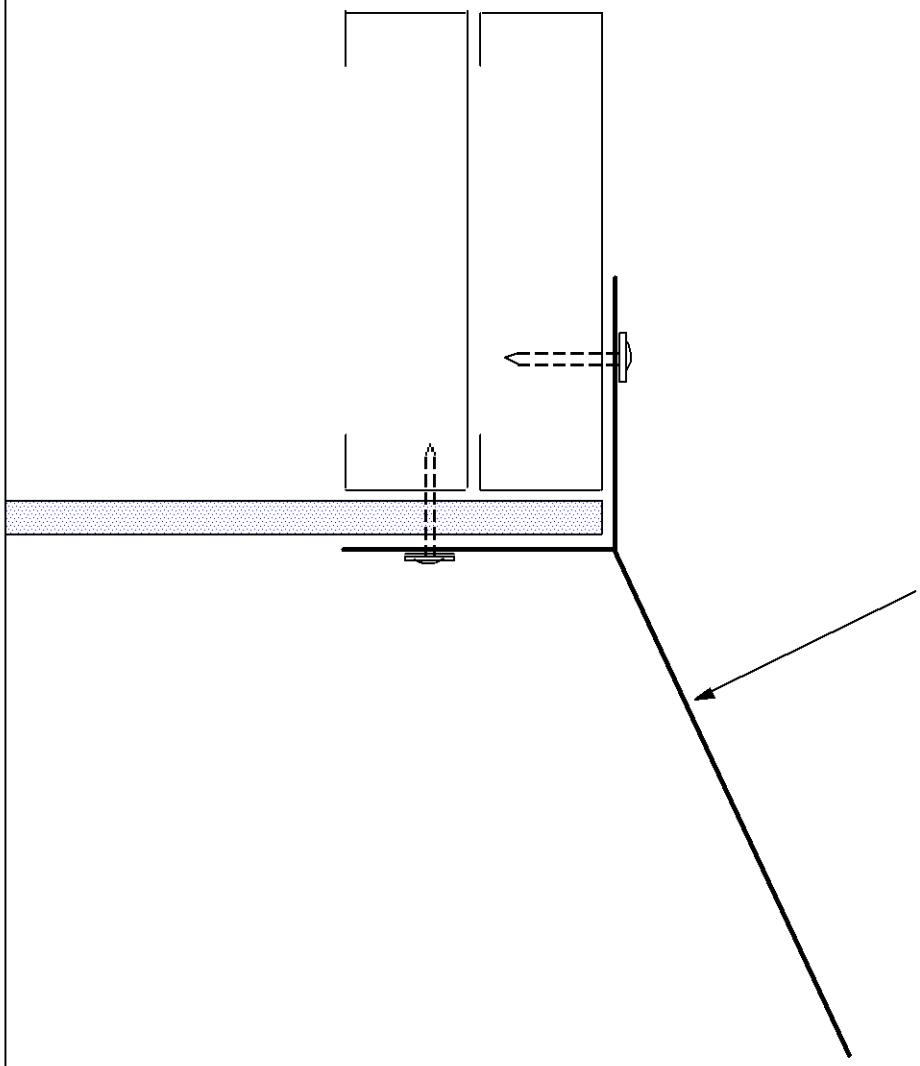

EXO-TEC MANUFACTURING, INC.
294 PLEASANT ST. SUITE 203A, STOUGHTON, MA 02072
(781) 344-9794 FAX (781) 344-9823
www.exo-tec.biz

WINDOW FLASHING SYSTEM INSTALLATION: SECTION AT JAMB 1

5.) INSTALL HYLOAD SELF ADHERING MEMBRANE FLASHING AT THE HUNG LINTEL.

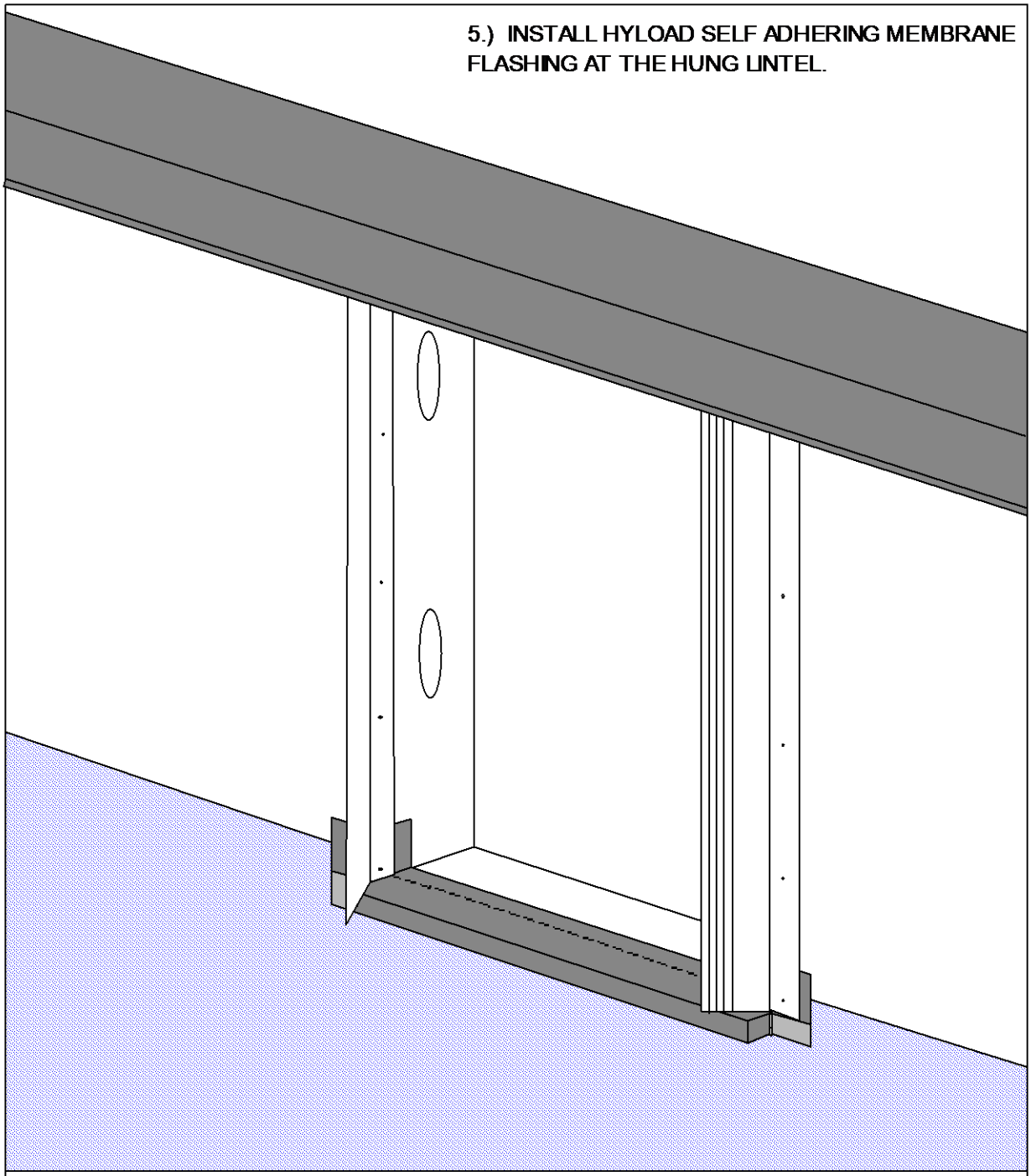

EXO-TEC MANUFACTURING, INC.
294 PLEASANT ST. SUITE 203A, STOUGHTON, MA 02072
(781) 344-9794 FAX (781) 344-9823
www.exo-tec.biz

WINDOW FLASHING SYSTEM INSTALLATION: STEP 5

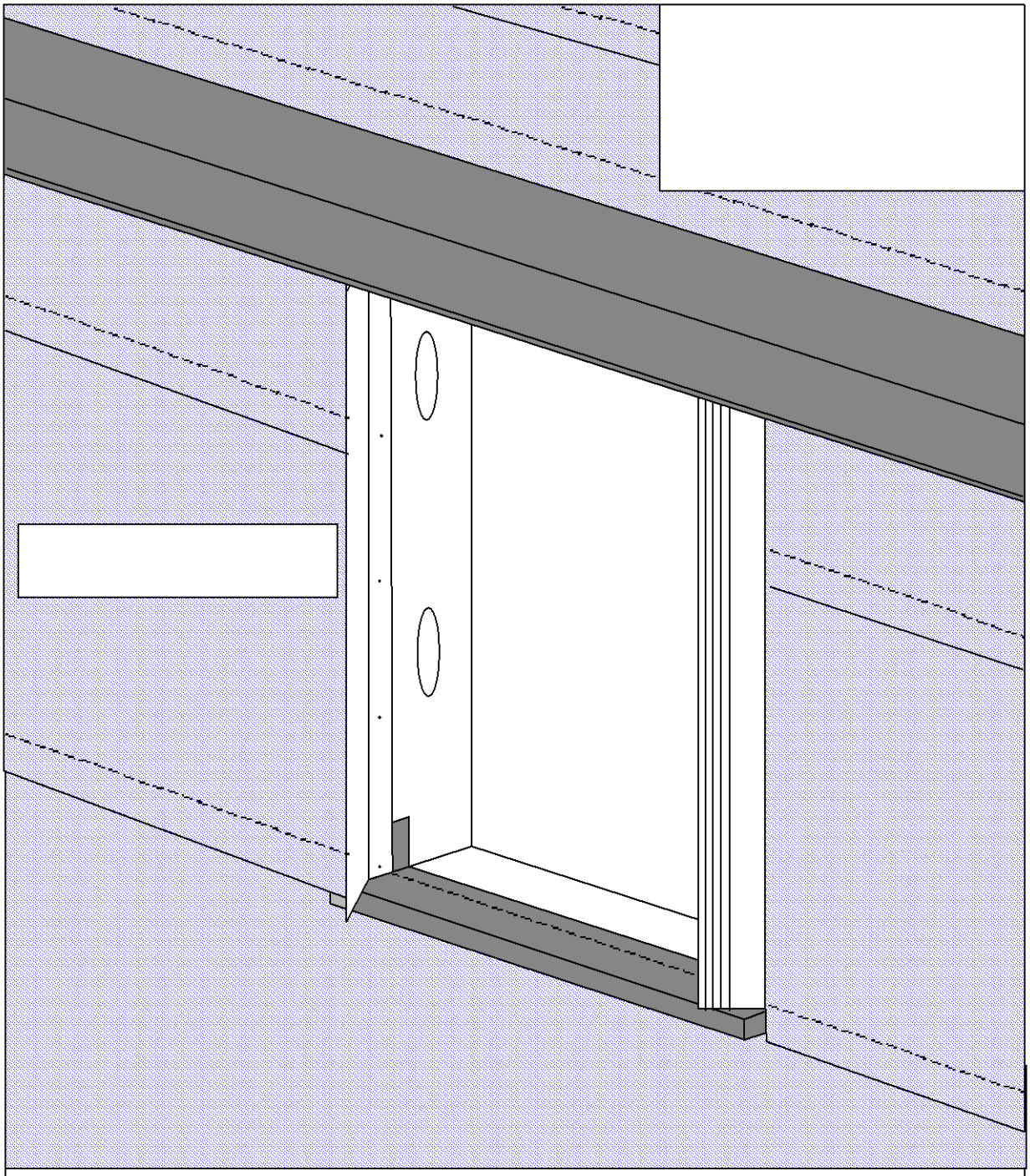

EXO-TEC MANUFACTURING, INC. (781) 344-9794 FAX (781) 344-9823
294 PLEASANT ST. SUITE 203A, STOUGHTON, MA 02072 www.exo-tec.biz

WINDOW FLASHING SYSTEM INSTALLATION: STEP 6

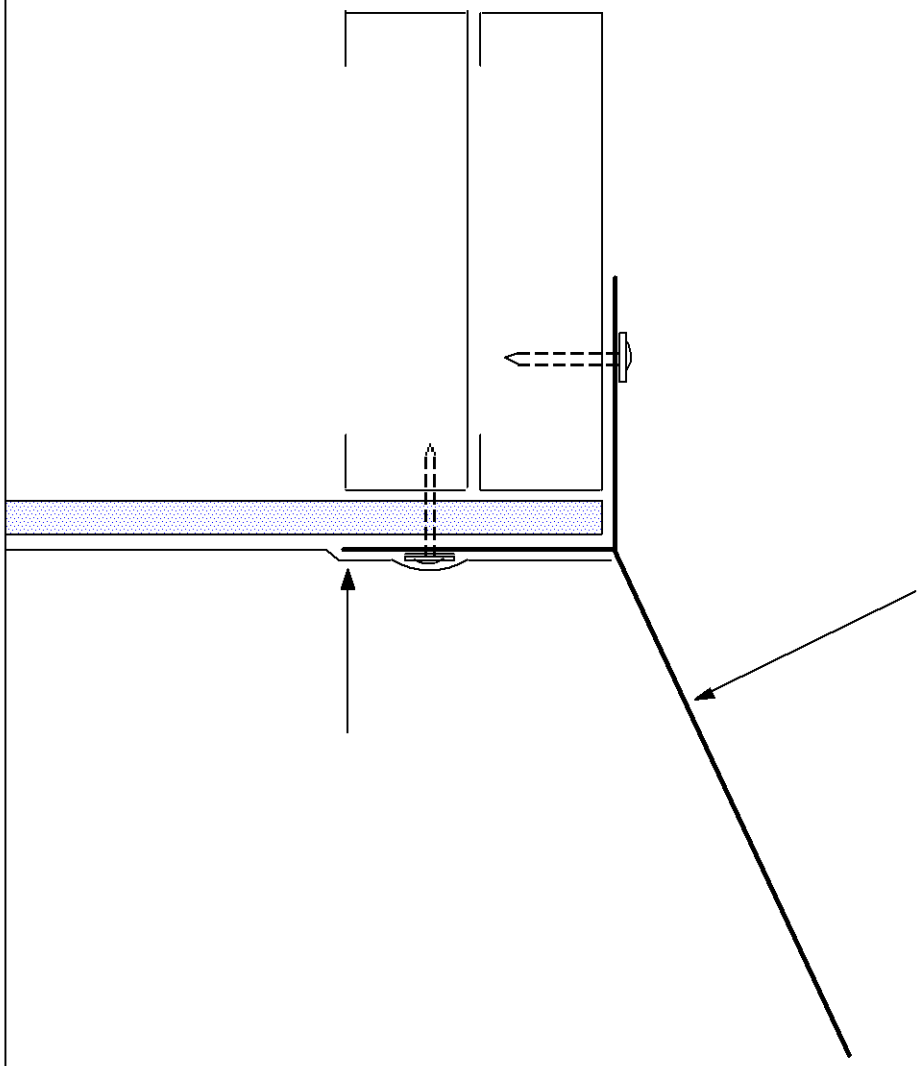

EXO-TEC MANUFACTURING, INC.
294 PLEASANT ST. SUITE 203A, STOUGHTON, MA 02072
(781) 344-9794 FAX (781) 344-9823
www.exo-tec.biz

WINDOW FLASHING SYSTEM INSTALLATION: SECTION AT JAMB 2

7.) FORM AND INTERNAL CORNER WITH THE HYLOAD SELF ADHERING FLASHING MEMBRANE AND APPLY TO JUNCTION OF THE RELIEVING AND AND THE JAMFLASH® FACING THE CAVITY.

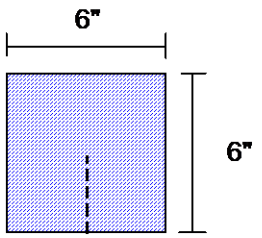

- MAKE A SINGLE CUT HALF WAY UP THE MIDDLE OF A 6" X6" SHEET OF HYLAOD S/A MEMBRANE.

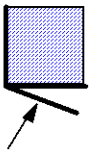

- REMOVE THE RELEASE PAPER, FOLD ONE FLAP OVER THE OTHER AS SHOWN AND PRESS TOGETHER FIRMLY.

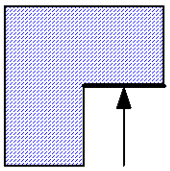

- FOLD RIGHT LEG UP TO A VERTICAL POSITION.

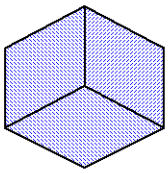

- THE FLASHING PAN SHOULD LOOK LIKE THIS. TURN IT UPSIDE DOWN AND ADHERE IT TO THE JUNSTION OF THE JAMFLASH® AND RELIEVING ANGLE AS SHOWN AT RIGHT.

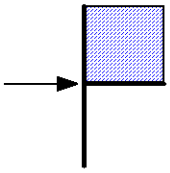

- FOLD LEFT HALF UP TO A VERTICAL POSITION PERPEN-DICULAR TO THE FIRST FOLD.

- ADD A DAB OF HYLOAD MASTIC TO SEAL THE INSIDE CORNER.

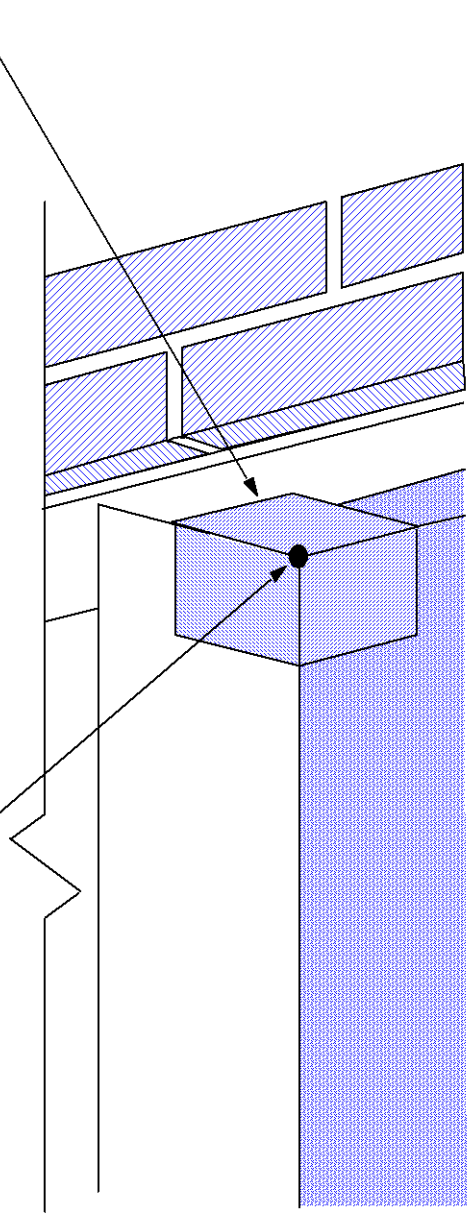

EXO-TEC MANUFACTURING, INC. (781) 344-9794 FAX (718) 344-9823
294 PLEASANT ST. SUITE 203A STOUGHTON, MA 02072 www.exo-tec.biz

WINDOW FLASHING INSTALLATION: STEP 7

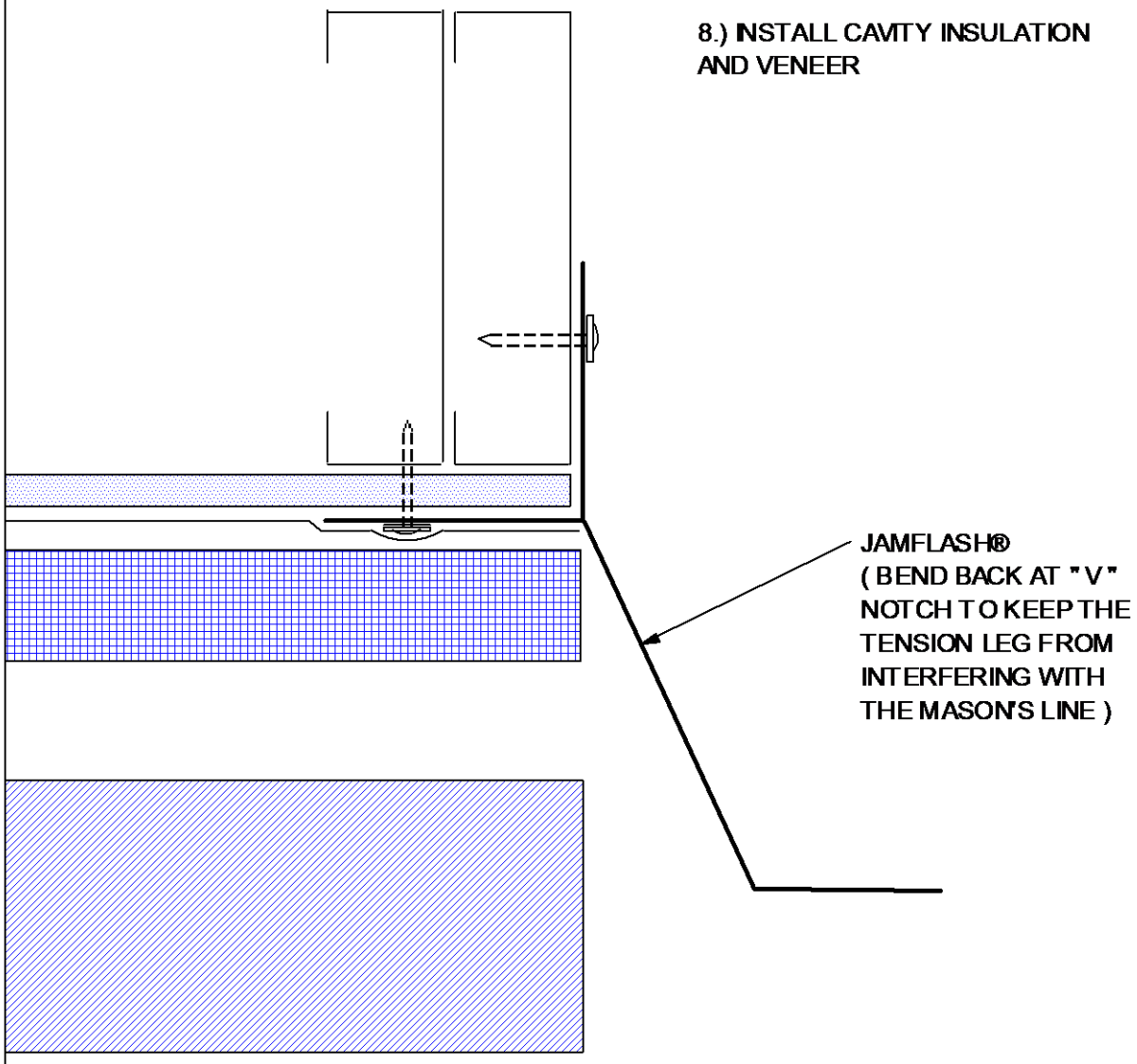

EXO-TEC MANUFACTURING, INC.
294 PLEASANT ST. SUITE 203A, STOUGHTON, MA 02072
(781) 344-9794 FAX (781) 344-9823
www.exo-tec.biz

WINDOW FLASHING SYSTEM INSTALLATION: STEP 8

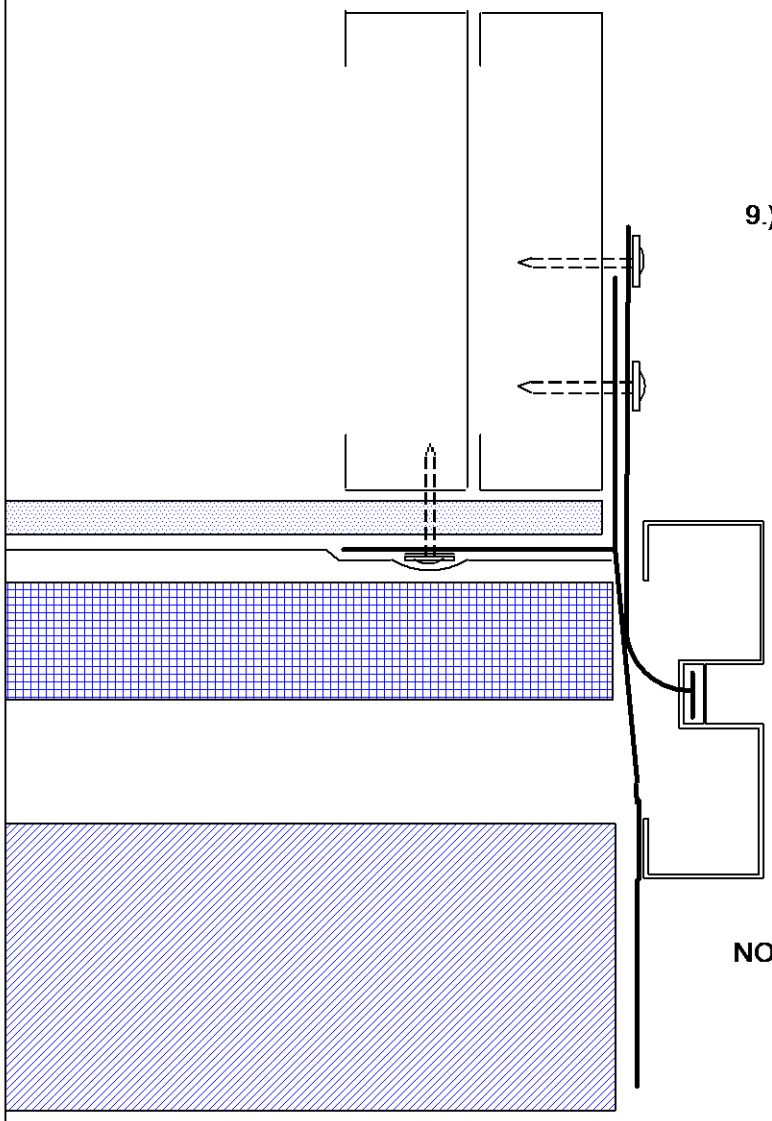

9.) INSTALL THE WINDOW FRAME

NOTE: THE INSTALLATION OF THE WINDOW WILL DEFLECT THE TENSION LEG OF THE JAMFLASH®

EXO-TEC MANUFACTURING, INC.
294 PLEASANT ST. SUITE 203A, STOUGHTON, MA 02072
(781) 344-9794 FAX (781) 344-9823
www.exo-tec.biz

WINDOW FLASHING SYSTEM INSTALLATION: STEP 9

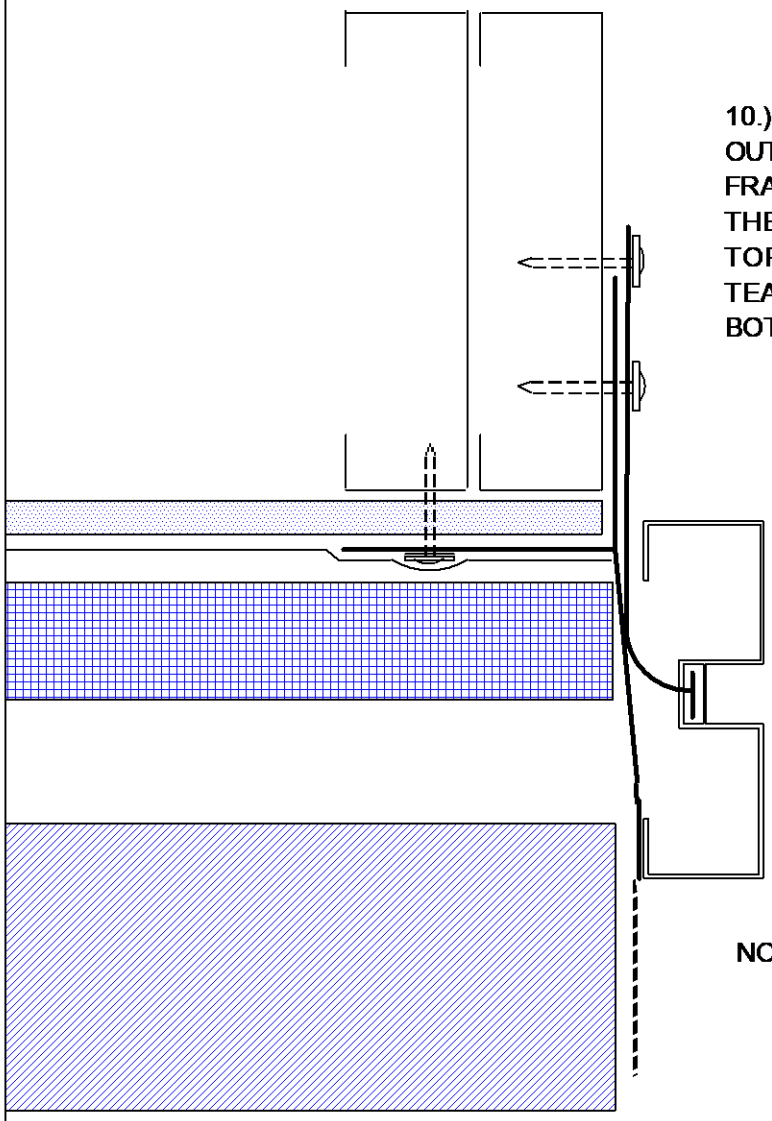

10.) TRIM THE JAMFLASH® AT THE OUTSIDE EDGE OF THE WINDOW FRAME BY STARTING A CUT AT THE NEAREST " V " NOTCH AT THE TOP OF THE WINDOW AND THEN TEARING IT OFF DOWN TO THE BOTTOM OF THE JAMFLASH®

NOTE: " V " NOTCHES ARE PLACED AT 1/4" INTERVALS FOR ACCURATE TRIMMING

EXO-TEC MANUFACTURING, INC.
294 PLEASANT ST. SUITE 203A, STOUGHTON, MA 02072
(781) 344-9794 FAX (781) 344-9823
www.exo-tec.biz

WINDOW FLASHING SYSTEM INSTALLATION: STEP 10

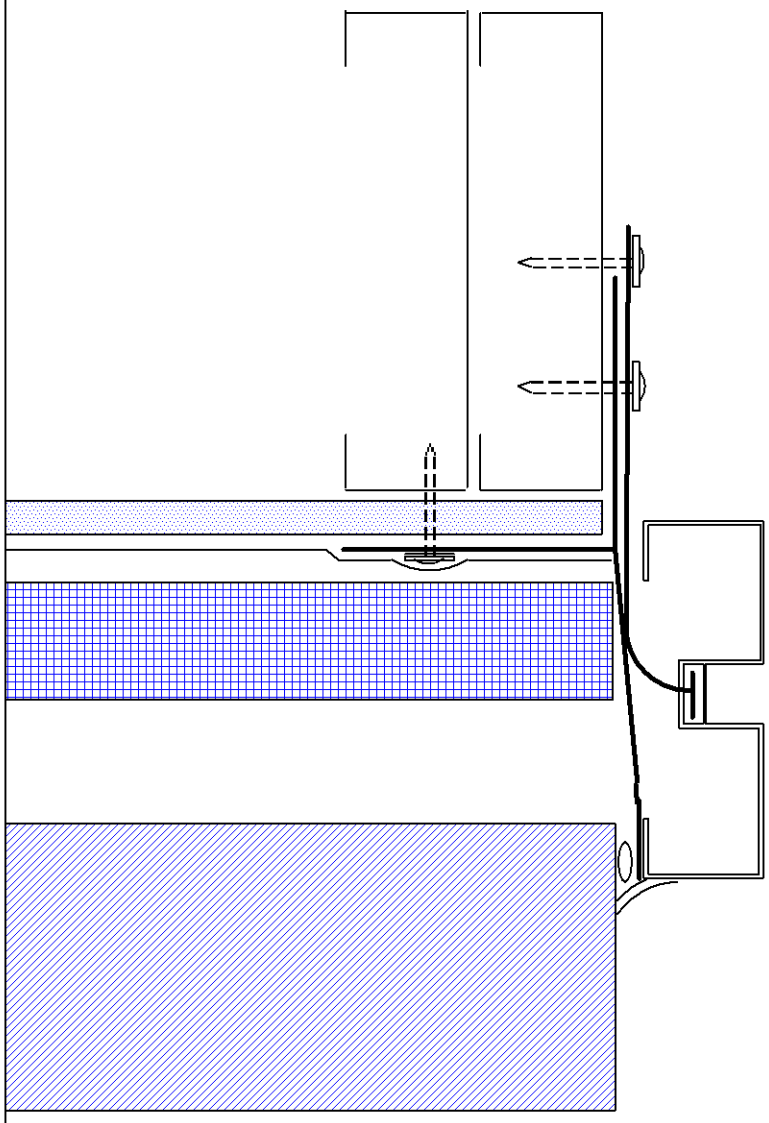

11.) INSTALL THE EXTERIOR BACKER ROD AND SEALANT AT THE WINDOW PERIMETER.

EXO-TEC MANUFACTURING, INC.
294 PLEASANT ST. SUITE 203A, STOUGHTON, MA 02072
(781) 344-9794 FAX (781) 344-9823
www.exo-tec.biz

WINDOW FLASHING SYSTEM INSTALLATION: STEP 11

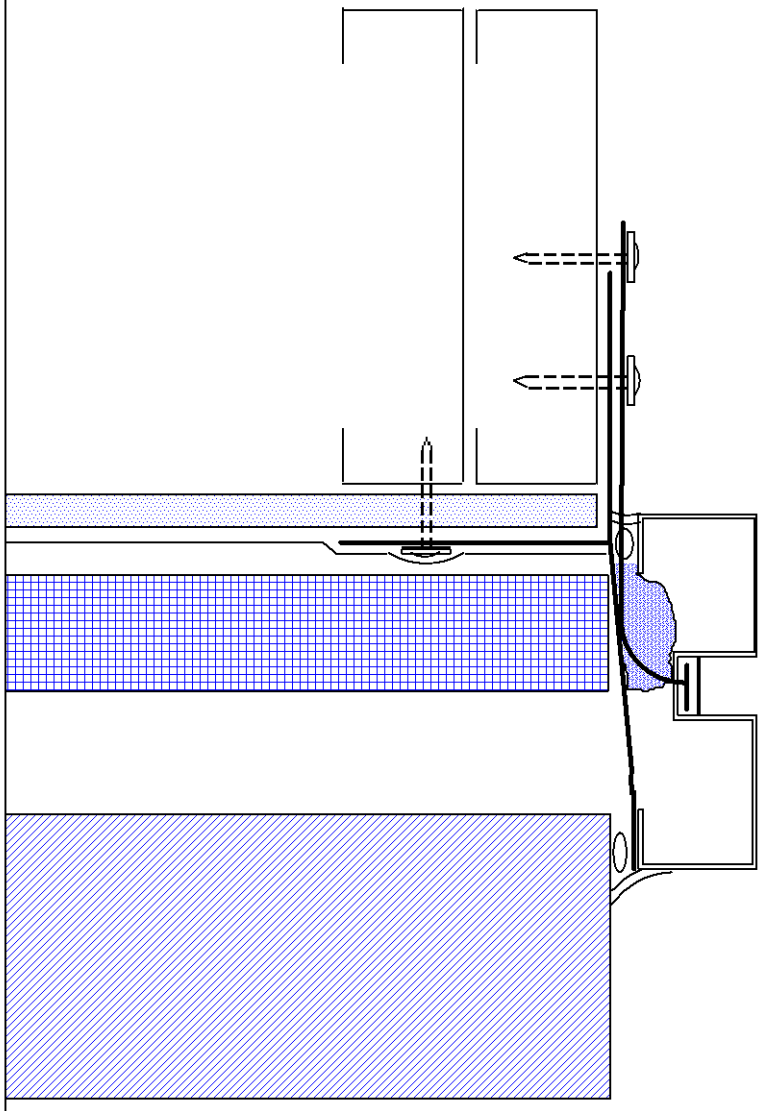

EXO-TEC MANUFACTURING, INC.
294 PLEASANT ST. SUITE 203A, STOUGHTON, MA 02072
(781) 344-9794 FAX (781) 344-9823
www.exo-tec.biz

WINDOW FLASHING SYSTEM INSTALLATION: STEP 12 (OPTION 1)

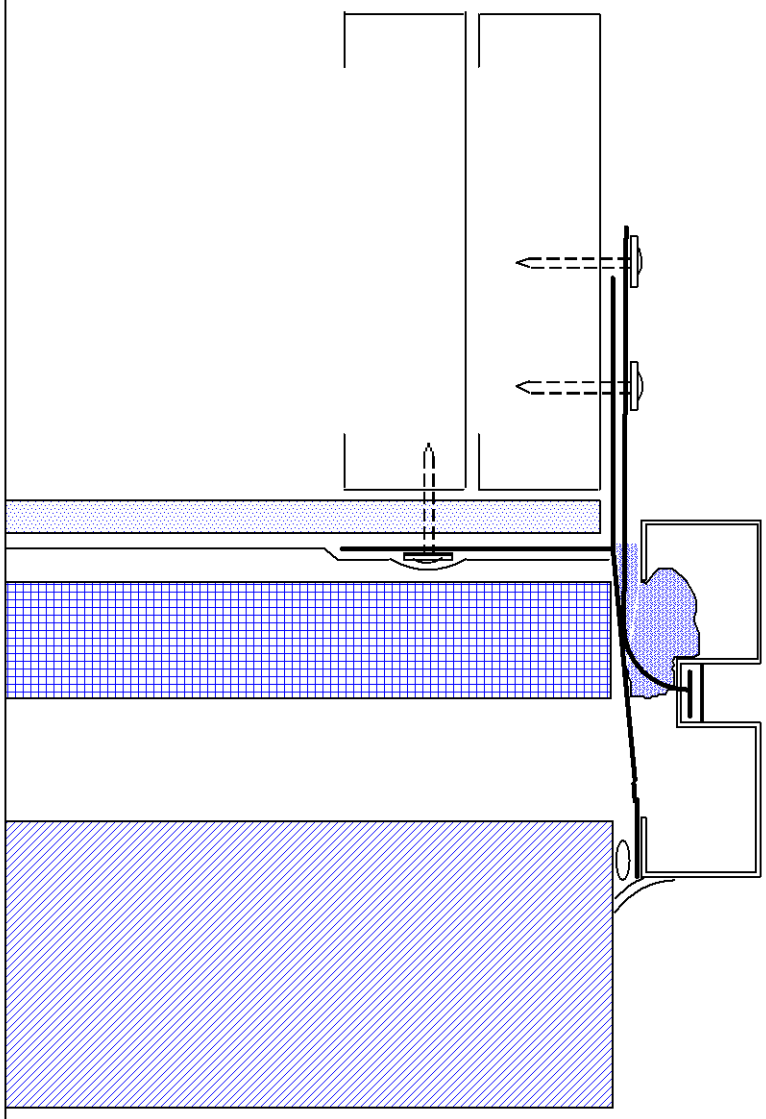

EXO-TEC MANUFACTURING, INC.
294 PLEASANT ST. SUITE 203A, STOUGHTON, MA 02072
(781) 344-9794 FAX (781) 344-9823
www.exo-tec.biz

WINDOW FLASHING SYSTEM INSTALLATION: STEP 12 (OPTION 2)

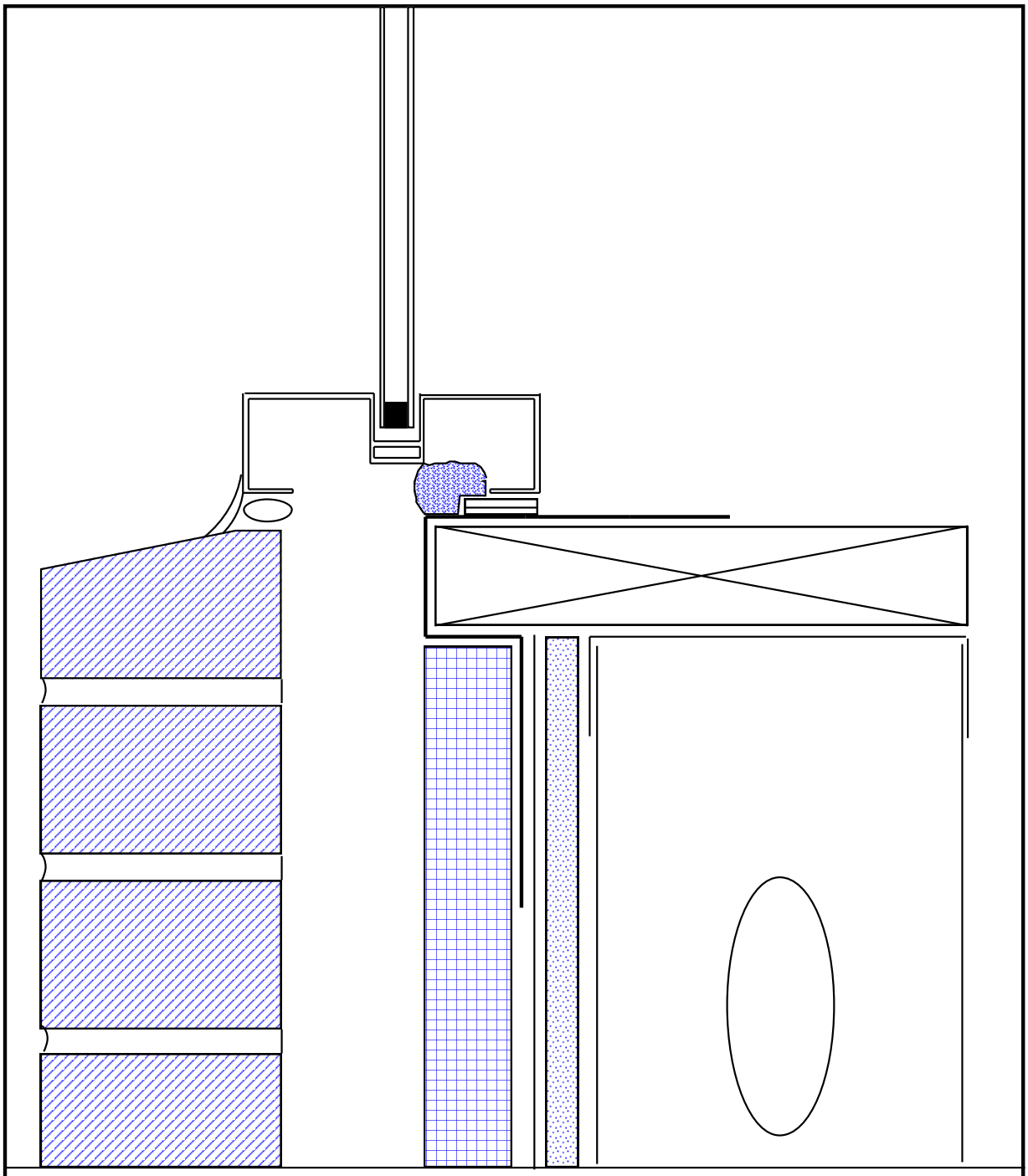

EXO-TEC MANUFACTURING, INC. (781) 344-9794 FAX (781) 344-9823
294 PLEASANT ST. SUITE 203A, STOUGHTON, MA 02072 www.exo-tec.biz

WINDOW FLASHING SYSTEM INSTALLATION: STEP 13

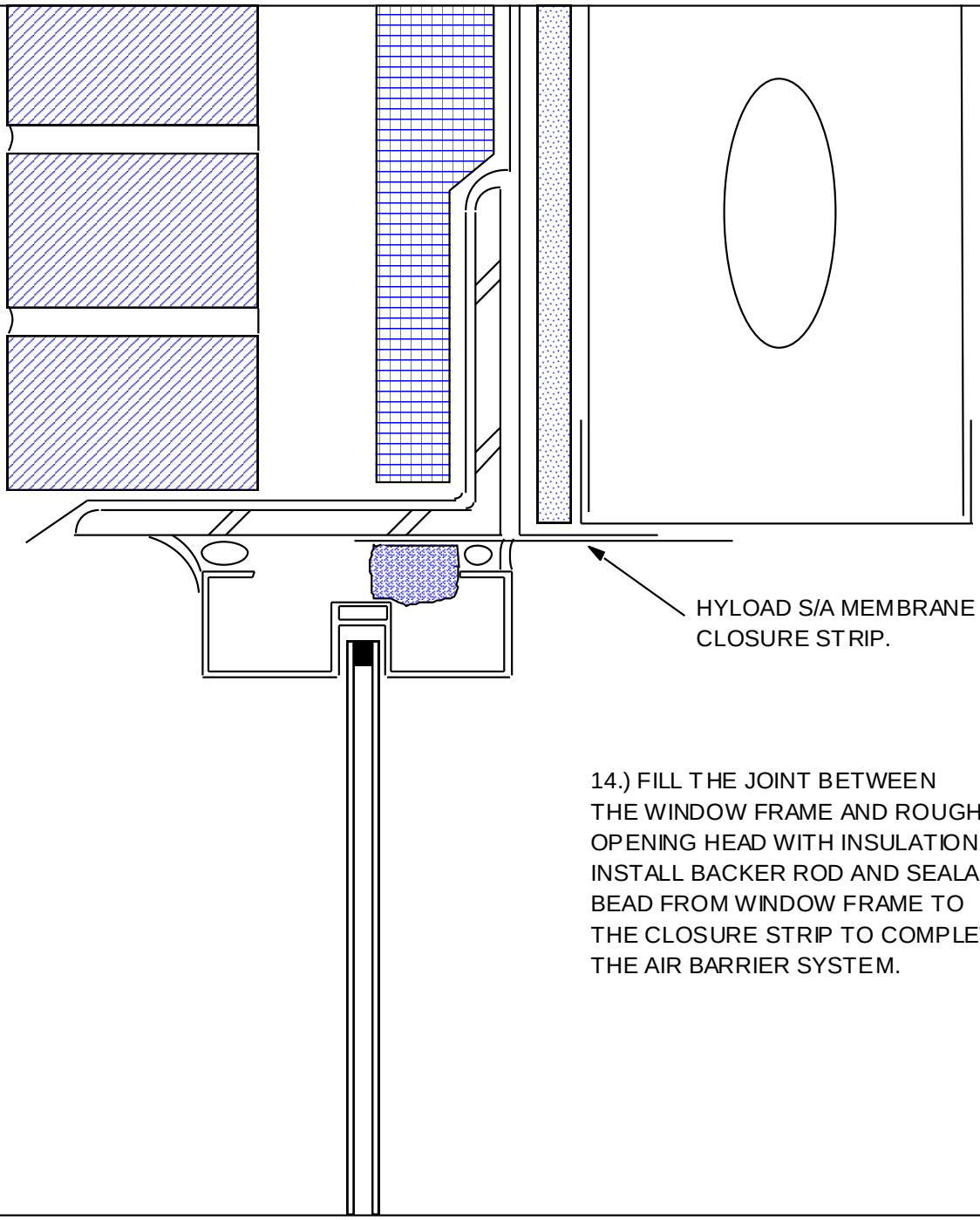

14.) FILL THE JOINT BETWEEN THE WINDOW FRAME AND ROUGH OPENING HEAD WITH INSULATION. INSTALL BACKER ROD AND SEALANT BEAD FROM WINDOW FRAME TO THE CLOSURE STRIP TO COMPLETE THE AIR BARRIER SYSTEM.

EXO-TEC MANUFACTURING, INC. (781) 344-9794 FAX (781) 344-9823
294 PLEASANT ST. SUITE 203A, STOUGHTON, MA 02072 www.exo-tec.biz

WINDOW FLASHING SYSTEM INSTALLATION: STEP 14 (OPTION 1)

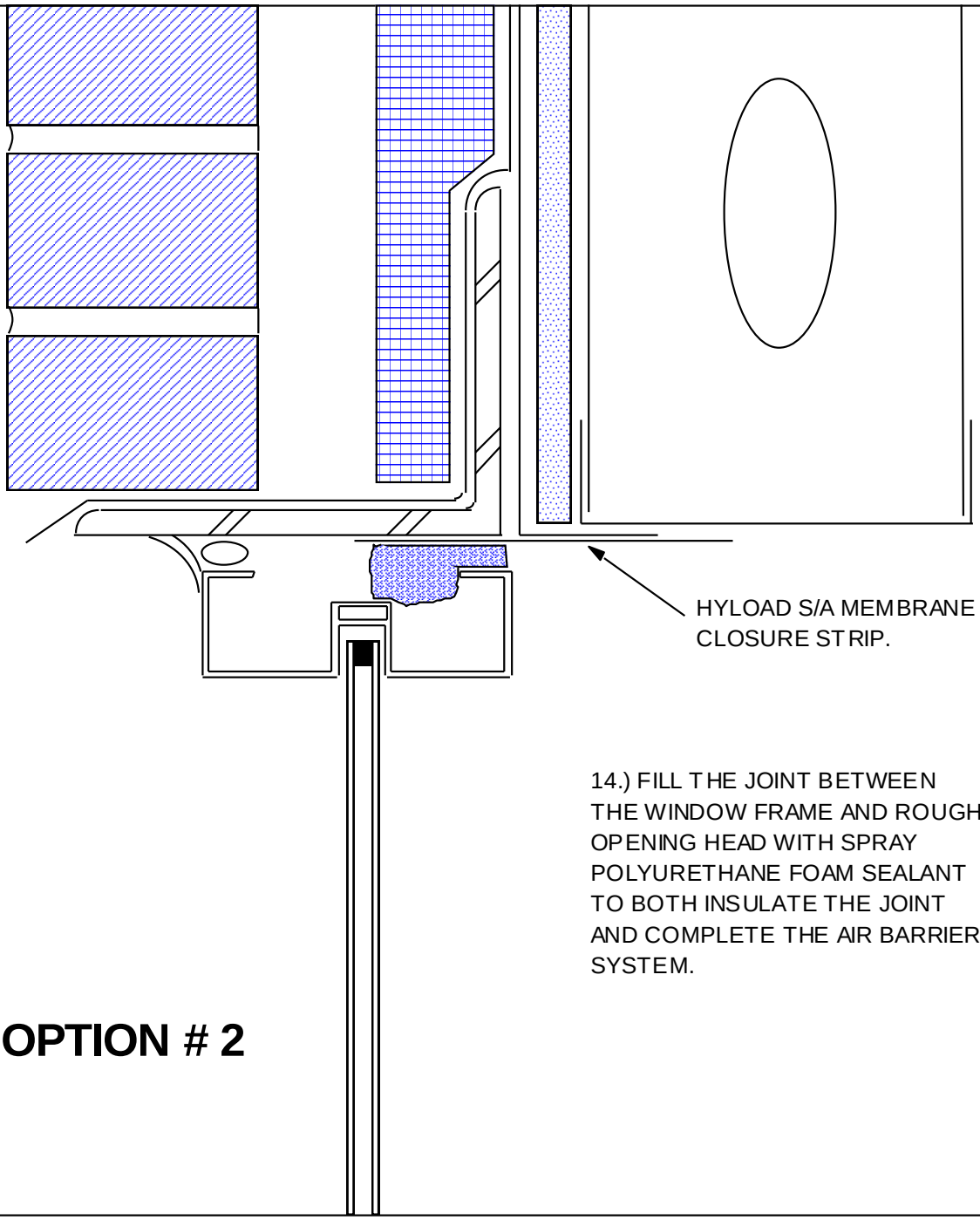

14.) FILL THE JOINT BETWEEN THE WINDOW FRAME AND ROUGH OPENING HEAD WITH SPRAY POLYURETHANE FOAM SEALANT TO BOTH INSULATE THE JOINT AND COMPLETE THE AIR BARRIER SYSTEM.

OPTION # 2

EXO-TEC MANUFACTURING, INC. (781) 344-9794 FAX (781) 344-9823
294 PLEASANT ST. SUITE 203A, STOUGHTON, MA 02072 www.exo-tec.biz

WINDOW FLASHING SYSTEM INSTALLATION: STEP 14 (OPTION 2)

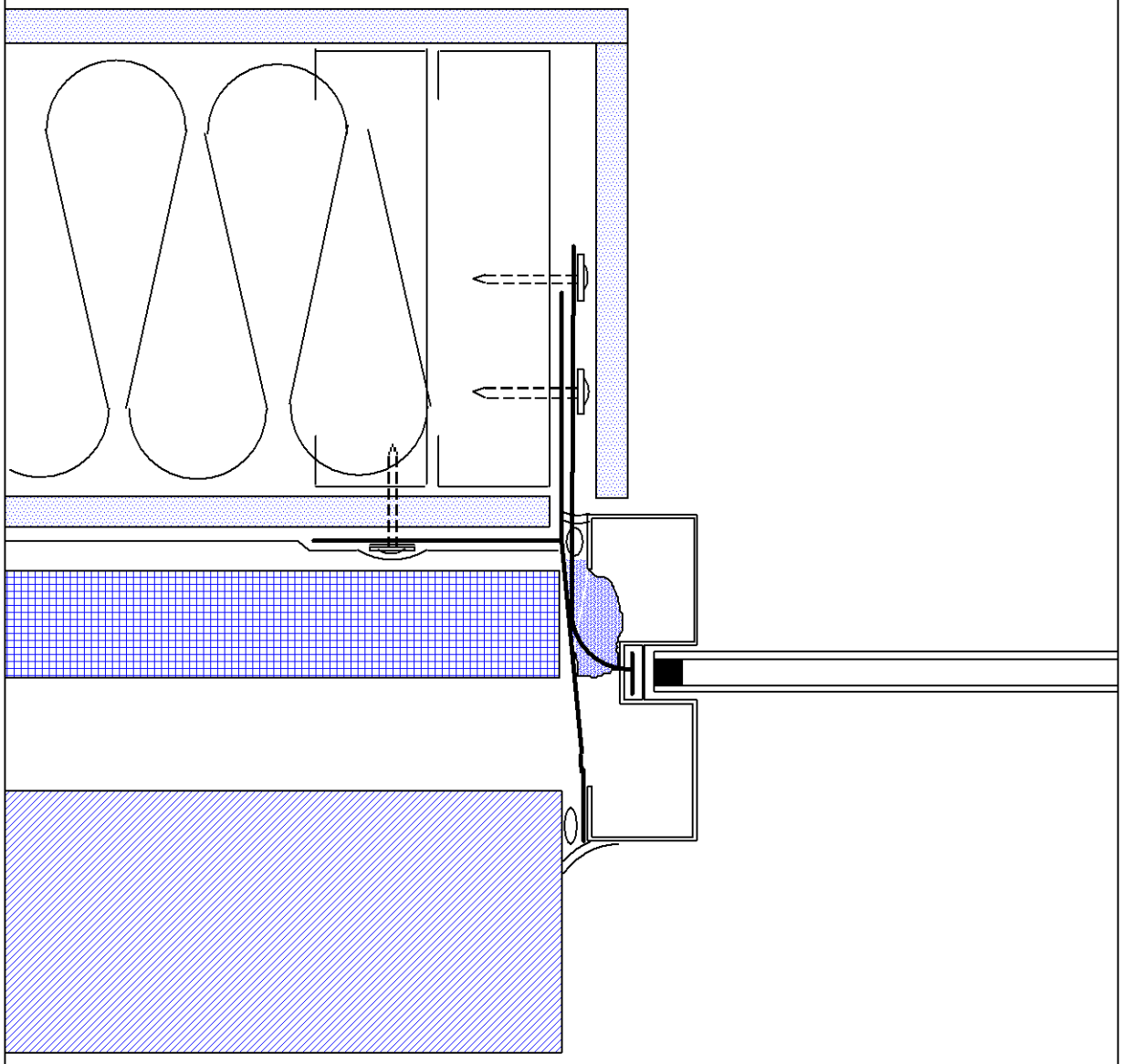

EXO-TEC MANUFACTURING, INC.
294 PLEASANT ST. SUITE 203A, STOUGHTON, MA 02072
(781) 344-9794 FAX (781) 344-9823
www.exo-tec.biz

WINDOW FLASHING SYSTEM INSTALLATION: STEP 15

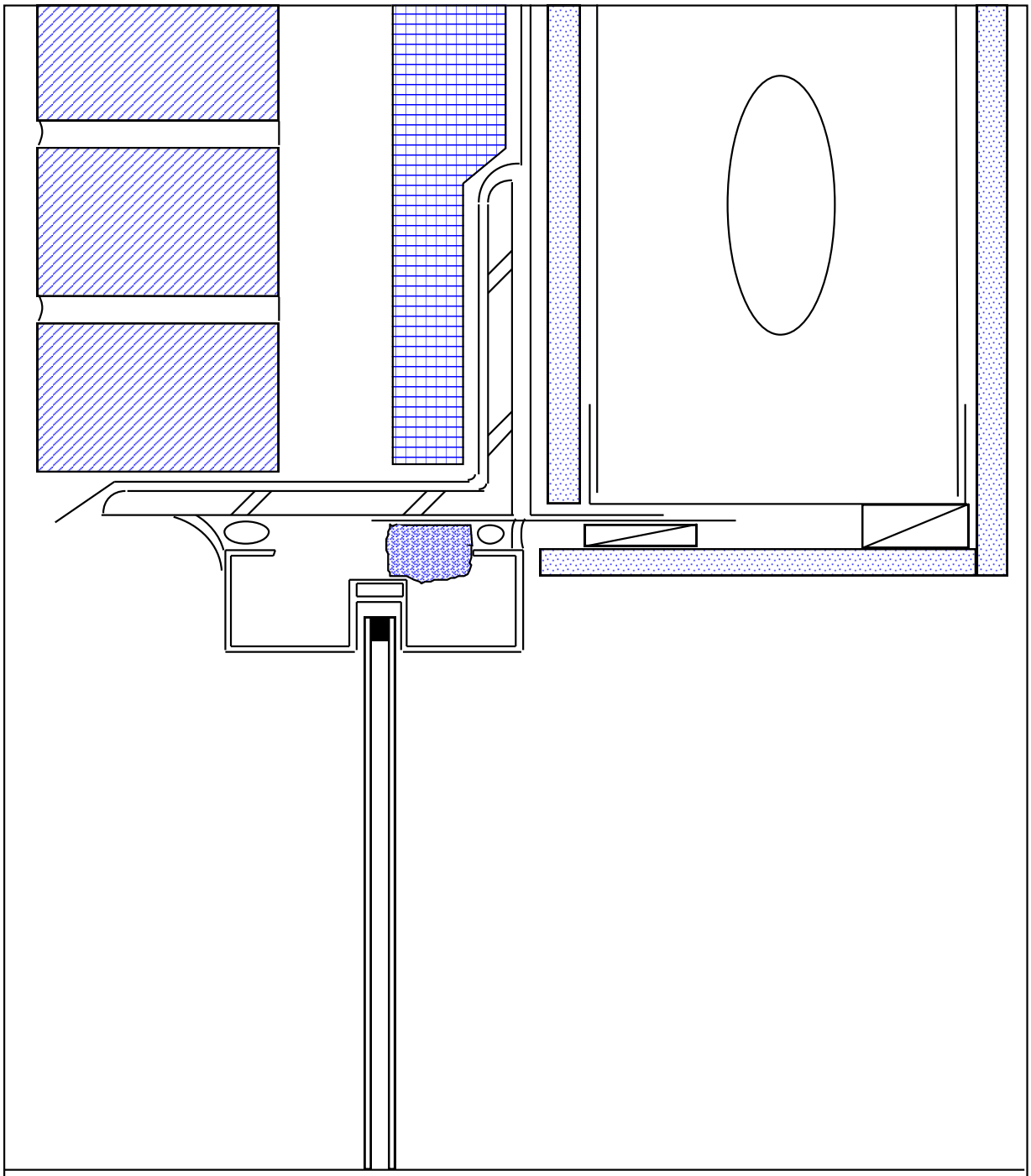

EXO-TEC MANUFACTURING, INC.
294 PLEASANT ST. SUITE 203A, STOUGHTON, MA 02072
(781) 344-9794 FAX (781) 344-9823
www.exo-tec.biz

WINDOW FLASHING SYSTEM INSTALLATION: STEP 16

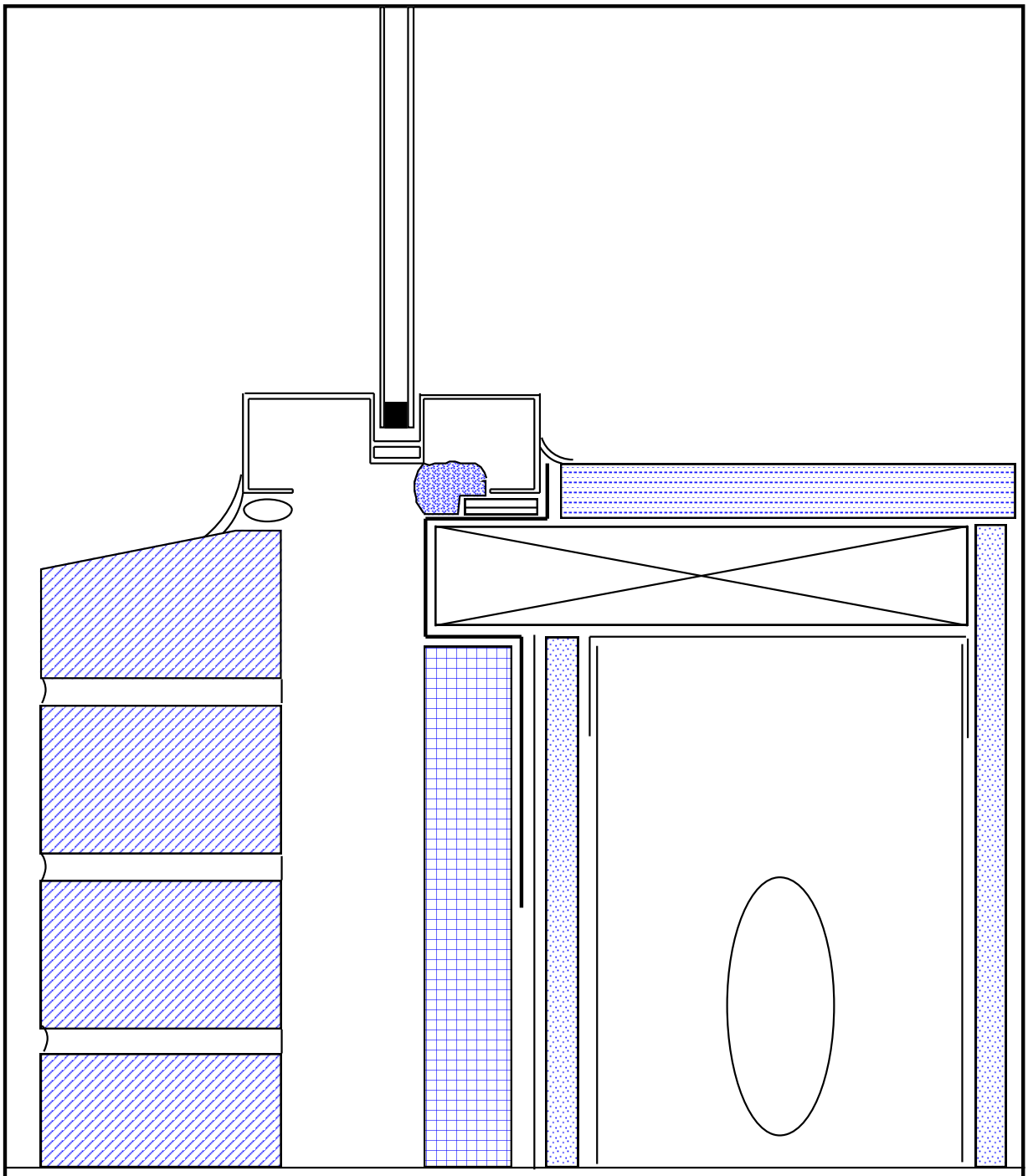

EXO-TEC MANUFACTURING, INC. (781) 344-9794 FAX (781) 344-9823
294 PLEASANT ST. SUITE 203A, STOUGHTON, MA 02072 www.exo-tec.biz

WINDOW FLASHING SYSTEM INSTALLATION: STEP 17

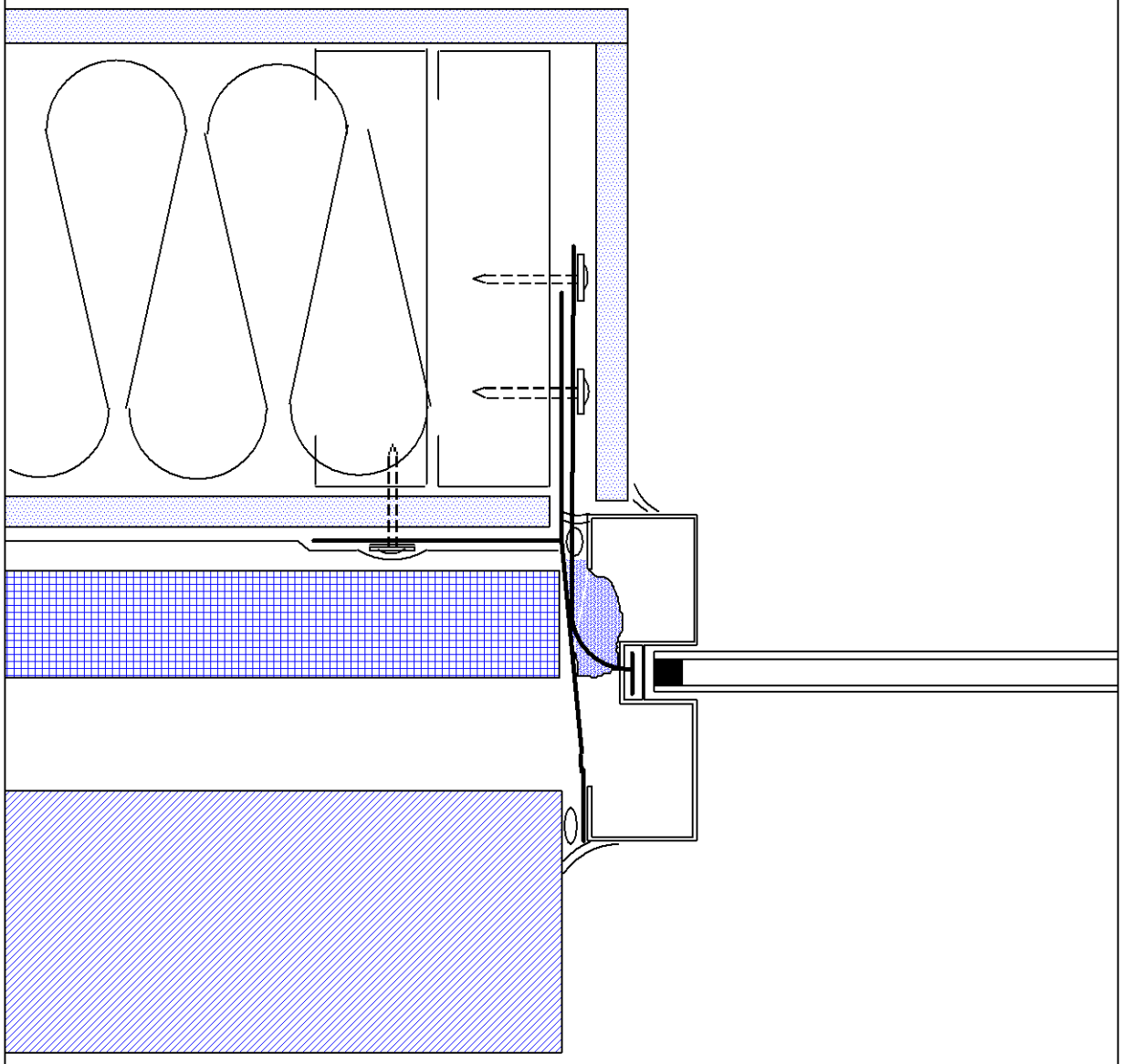

LENNEL SPECIALTIES CORPORATION (781) 344-9794 FAX (781) 344-9823
294 PLEASANT ST. SUITE 101, STOUGHTON, MA 02072 www.lennelspecco.com

WINDOW FLASHING SYSTEM INSTALLATION: STEP 18

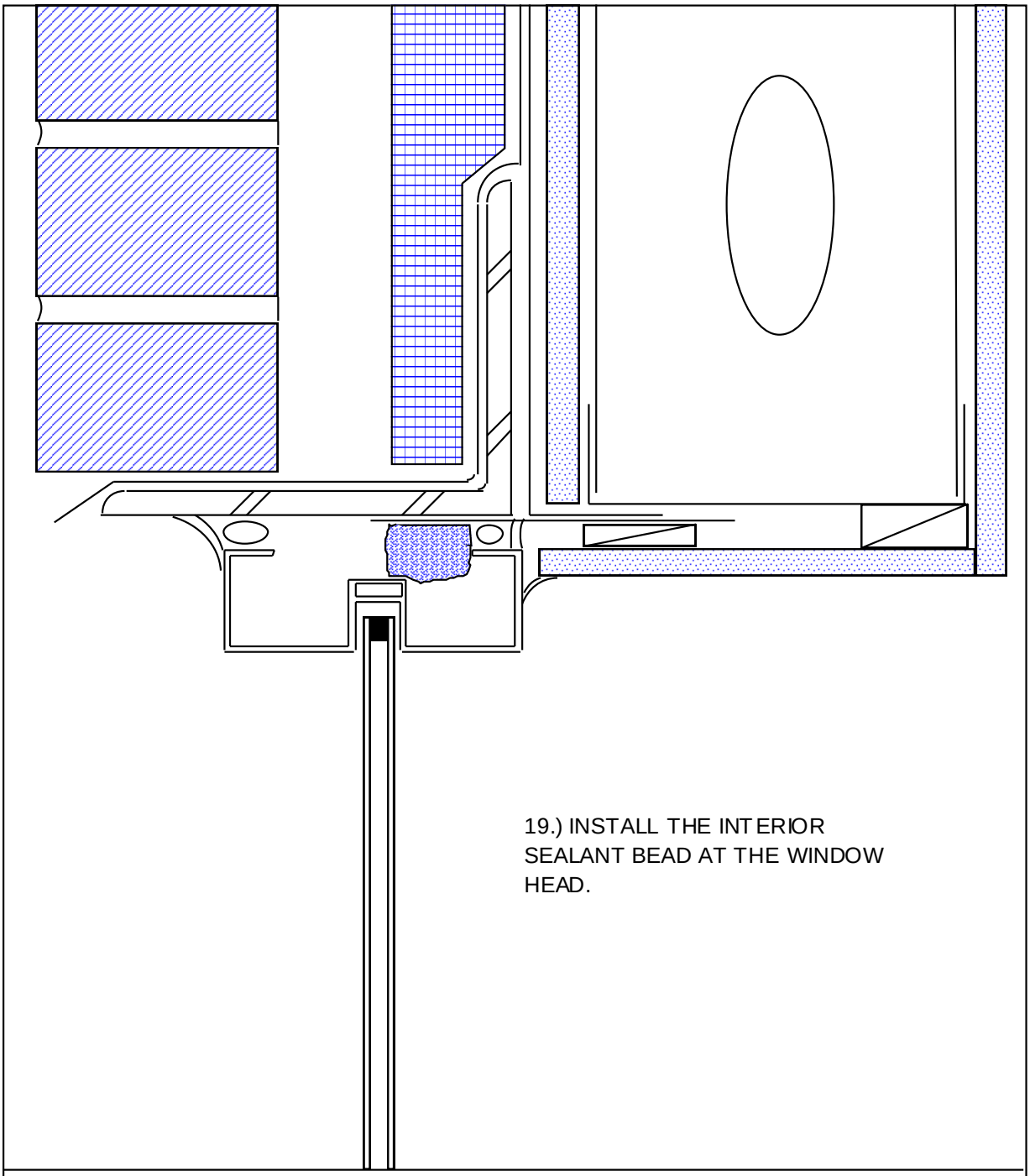

19.) INSTALL THE INTERIOR SEALANT BEAD AT THE WINDOW HEAD.

EXO-TEC MANUFACTURING, INC.
294 PLEASANT ST. SUITE 203A, STOUGHTON, MA 02072
(781) 344-9794 FAX (781) 344-9823
www.exo-tec.biz

WINDOW FLASHING SYSTEM INSTALLATION: STEP 19